Parts List			
Item	Qty	Part Number	Material
1	1	Orin_Mount0.4	----
2	2	Handheld_handle	Plastic, Opaque Black
3	1	Camera_mount	----
4	1	Main Plate	Plastic, Opaque Black
5	6	DIN 7984 - M4 x 12 Stainless Steel A2 Plain	Stainless Steel A2, Plain
6	2	DIN 7984 - M4 x 20 Stainless Steel A2 Plain	Stainless Steel A2, Plain
7	4	DIN 7984 - M5 x 25 Steel 4.6 Plain	Steel 4.6, Plain
8	4	DIN 934 - M5 x 0.8 Steel 6 Plain	Steel 6, Plain
9	4	DIN 934 - M4 x 0.7 Steel 6 Plain	Steel 6, Plain
10	1	Screen_mount_vertical	----
11	2	DIN 7984 - M4 x 20 Steel 4.6 Plain	Steel 4.6, Plain
12	4	DIN 7984 - M3 x 12 Steel 4.6 Plain	Steel 4.6, Plain
13	4	DIN 934 - M3 x 0.5 Steel 6 Plain	Steel 6, Plain

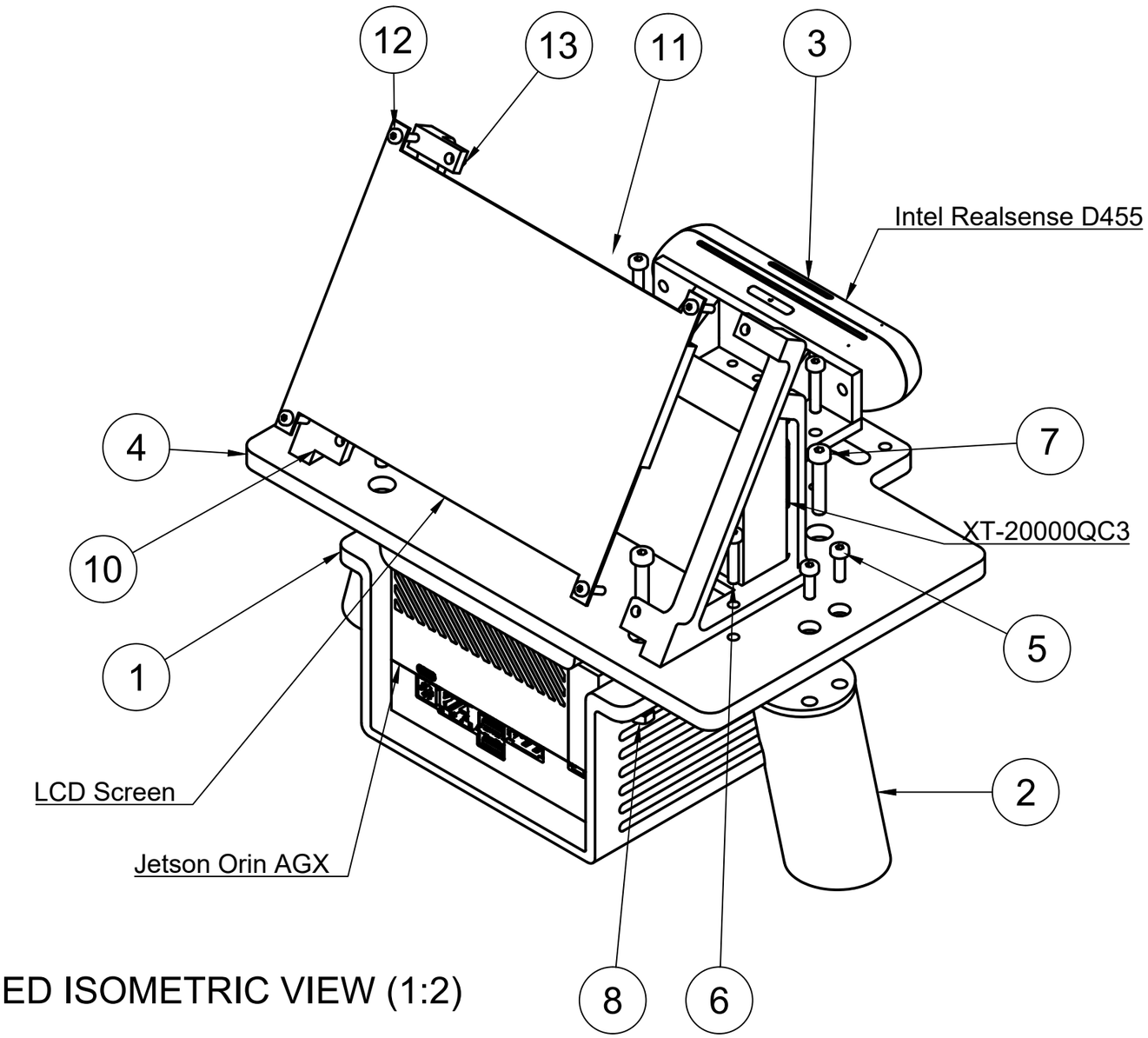

EXPLODED ISOMETRIC VIEW (1:2)

Dept.	Technical reference	Created by Shady Gmira 6/16/2025	Approved by
		Document type	Document status v2.0
		Title ASIG-MOMA Exploded View with BOM Camera Configuration	DWG No.
			Rev. / Date of issue / Sheet 1/19

Parts List			
Item	Qty	Part Number	Material
1	1	Orin_Mount0.4	----
2	2	Handheld_handle	Plastic, Opaque Black
3	1	Camera_mount	----
4	1	Main Plate	Plastic, Opaque Black
5	6	DIN 7984 - M4 x 12 Stainless Steel A2 Plain	Stainless Steel A2, Plain
6	2	DIN 7984 - M4 x 20 Stainless Steel A2 Plain	Stainless Steel A2, Plain
7	4	DIN 7984 - M5 x 25 Steel 4.6 Plain	Steel 4.6, Plain
8	4	DIN 934 - M5 x 0.8 Steel 6 Plain	Steel 6, Plain
9	6	DIN 934 - M4 x 0.7 Steel 6 Plain	Steel 6, Plain
10	1	Screen_mount_vertical	----
11	4	DIN 7984 - M4 x 20 Steel 4.6 Plain	Steel 4.6, Plain
12	4	DIN 7984 - M3 x 12 Steel 4.6 Plain	Steel 4.6, Plain
13	4	DIN 934 - M3 x 0.5 Steel 6 Plain	Steel 6, Plain
14	1	Lidarv3spacer	----
15	4	DIN EN ISO 7046-2 - M3x10 - H Steel 4.6 Plain	Steel 4.6, Plain

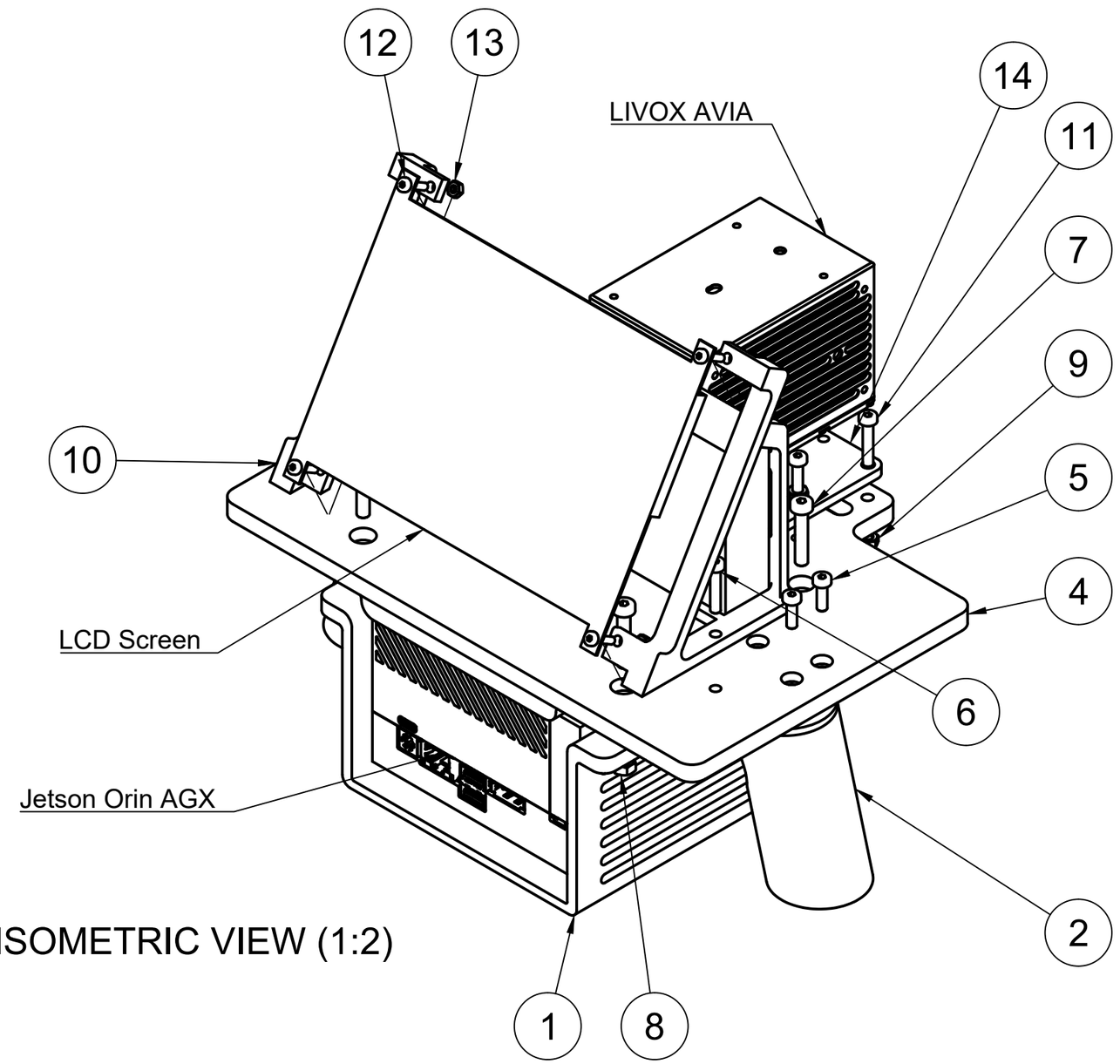

EXPLODED ISOMETRIC VIEW (1:2)

Dept.	Technical reference	Created by Shady Gmira 6/16/2025	Approved by
		Document type	Document status v2.0
		Title ASIG-MOMA Assembled Views LiDAR Configuration	DWG No.
			Rev. / Date of issue / Sheet 2/19

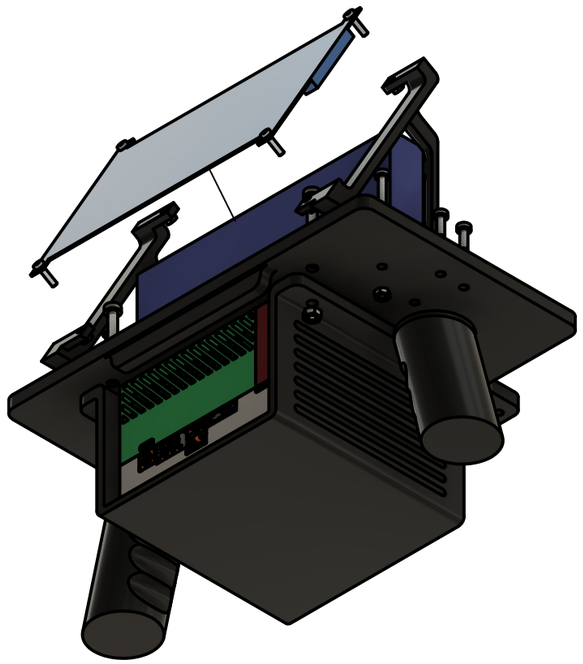

EXPLODED BOTTOM VIEW (1:3)

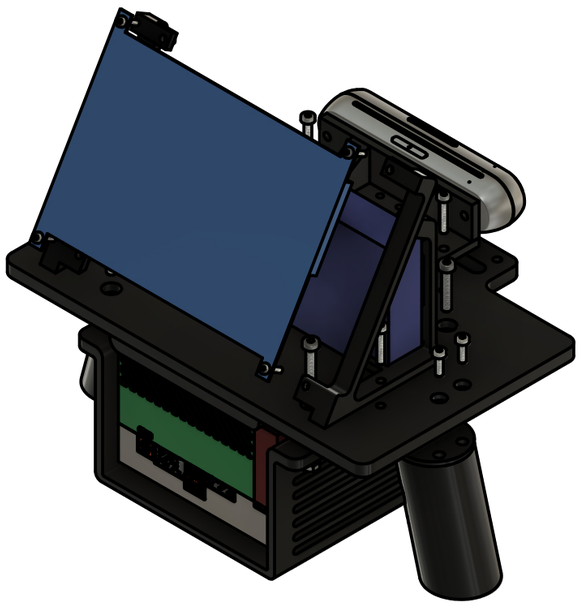

EXPLODED ISOMETRIC VIEW (1:3)

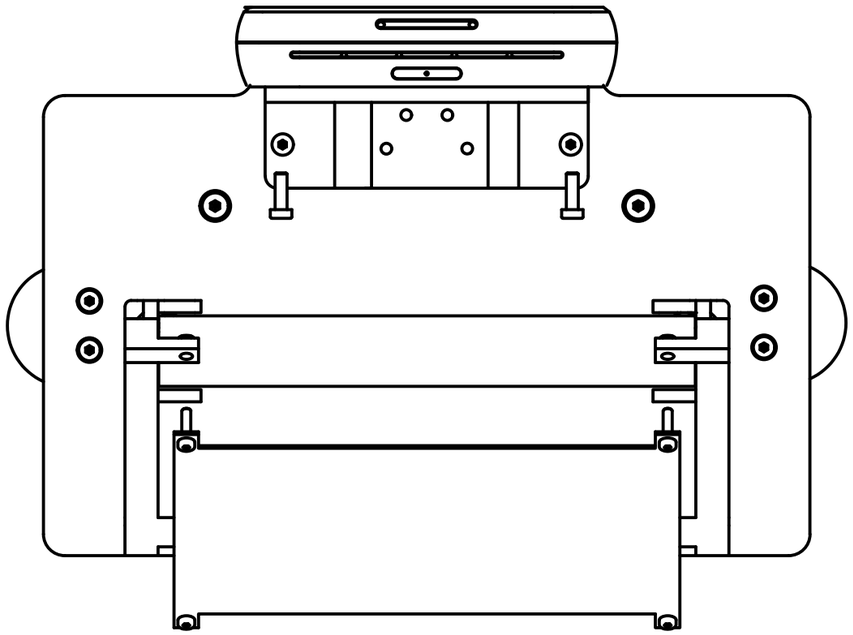

EXPLODED TOP VIEW (1:2)

Dept.	Technical reference	Created by: Shady Gmira 6/16/2025	Approved by
		Document type	Document status: v2.0
		Title: ASIG-MOMA Exploded Views	DWG No.
			Rev. / Date of issue / Sheet: 3/19

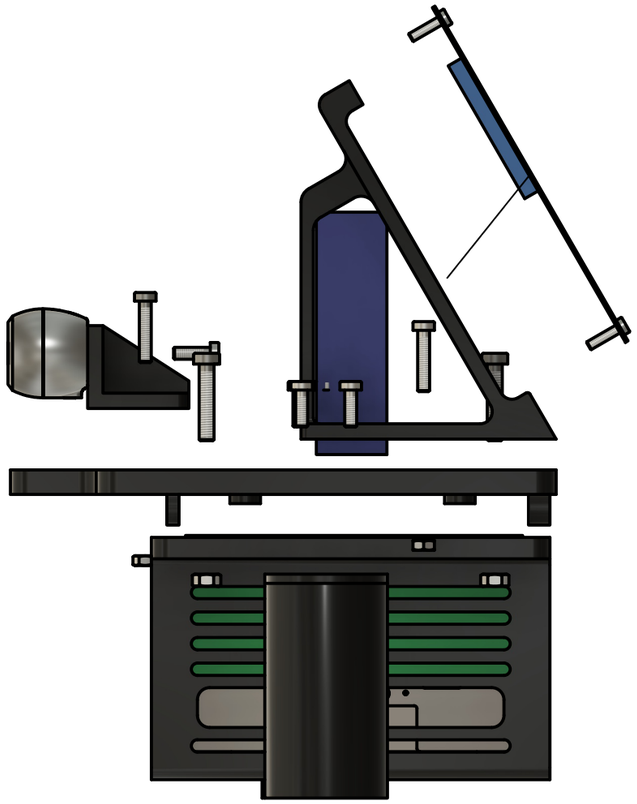

EXPLODED LEFT VIEW (1:2)

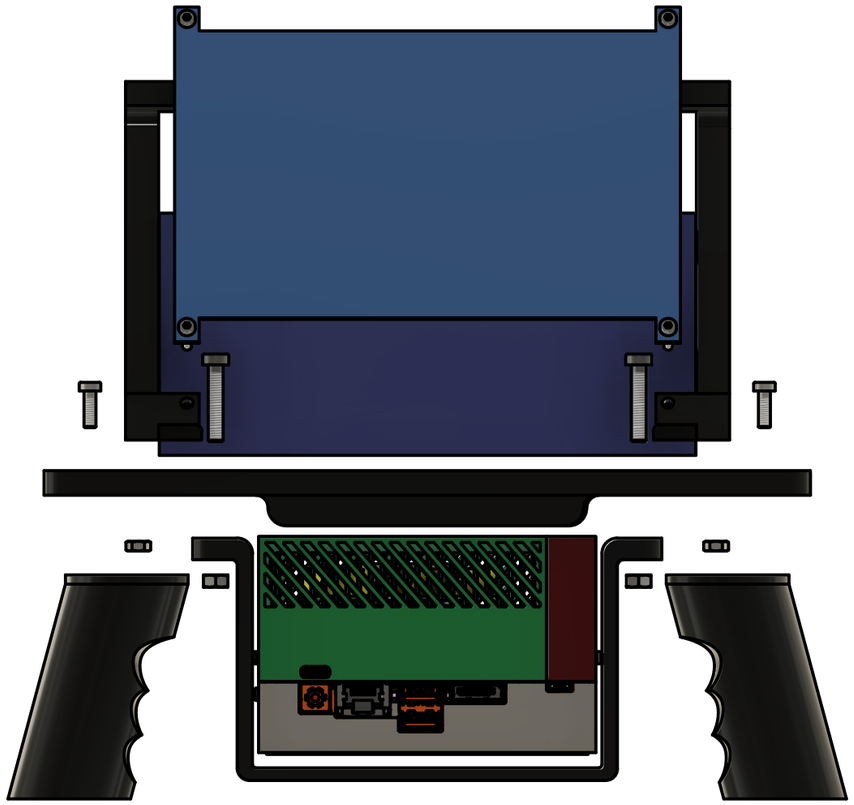

EXPLODED FRONT VIEW (1:2)

Dept.	Technical reference	Created by: Shady Gmira 6/16/2025	Approved by
		Document type	Document status: v2.0
		Title: ASIG-MOMA Exploded Orthographic Views	DWG No.
			Rev. / Date of issue / Sheet: 4/19

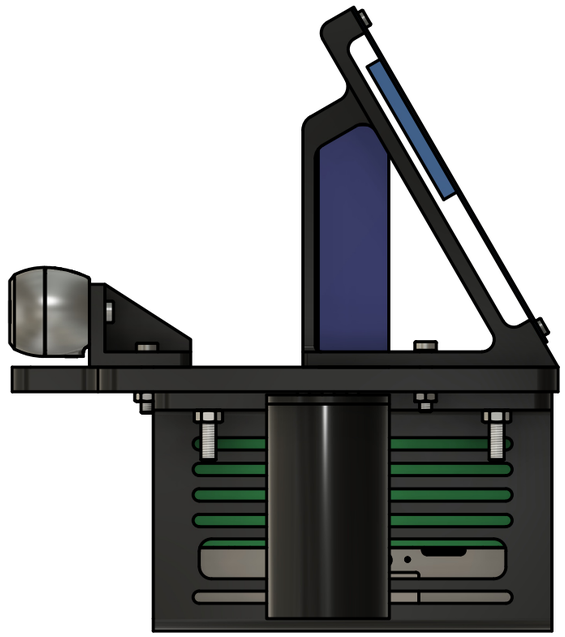

ASSEMBLED LEFT VIEW (1:2)

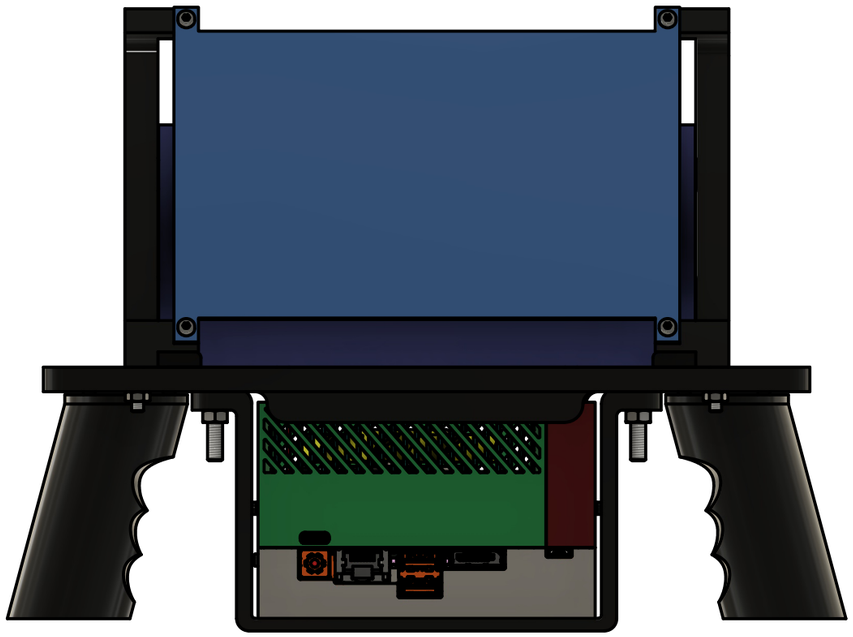

ASSEMBLED FRONT VIEW (1:2)

Dept.	Technical reference	Created by Shady Gmira 6/16/2025	Approved by
		Document type	Document status v2.0
		Title ASIG-MOMA Assembled Views	DWG No.
			Rev. / Date of issue / Sheet 5/19

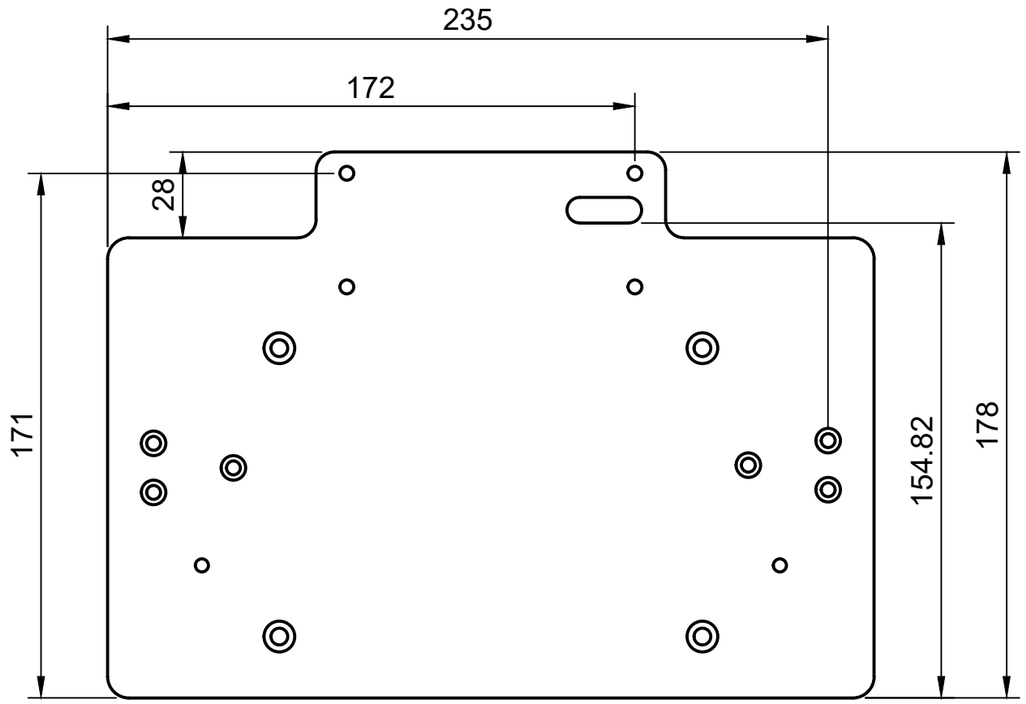

MAIN PLATE TOP VIEW (1:2)

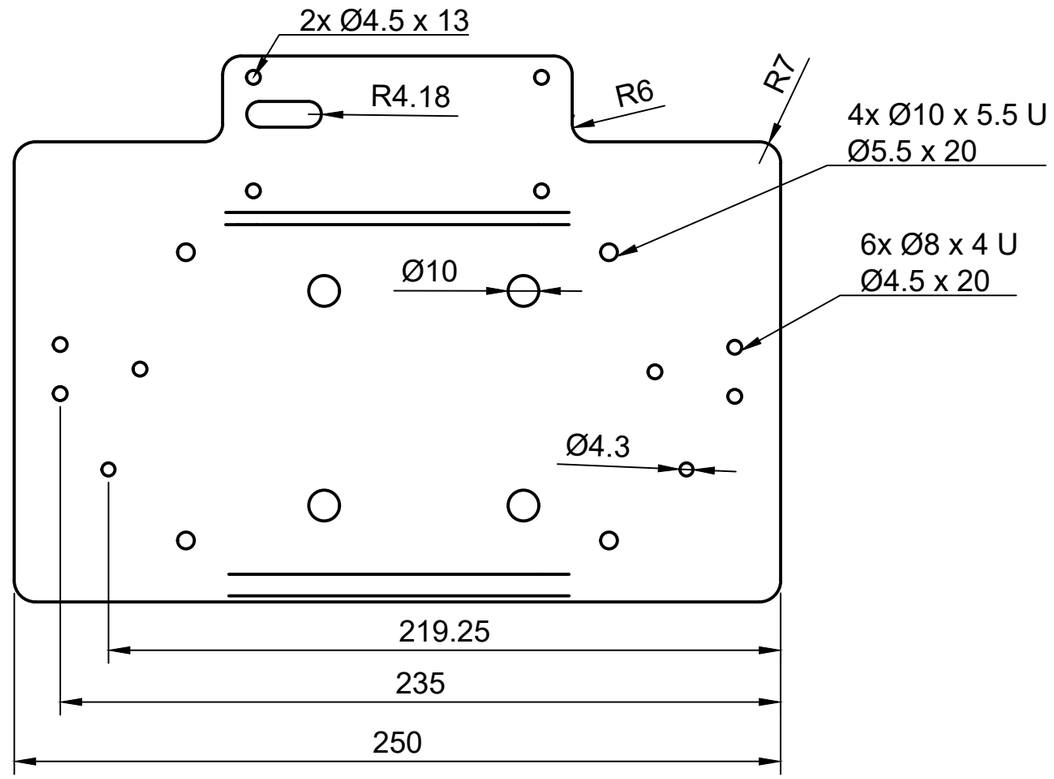

MAIN PLATE BOTTOM VIEW (1:2)

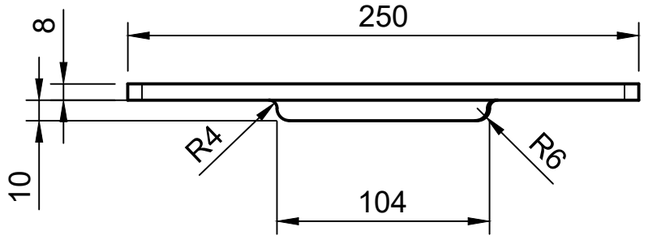

MAIN PLATE FRONT VIEW (1:3)

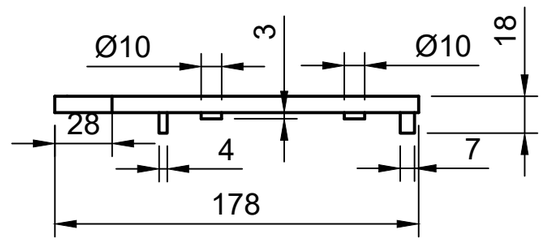

MAIN PLATE LEFT VIEW (1:3)

Dept. / Technical reference		Created by: Shady Gmira 6/16/2025	Approved by
		Document type	Document status: v2.0
		Title: ASIG-MOMA Engineering Drawings Main Plate	DWG No.
			Rev. / Date of issue / Sheet: 6/19

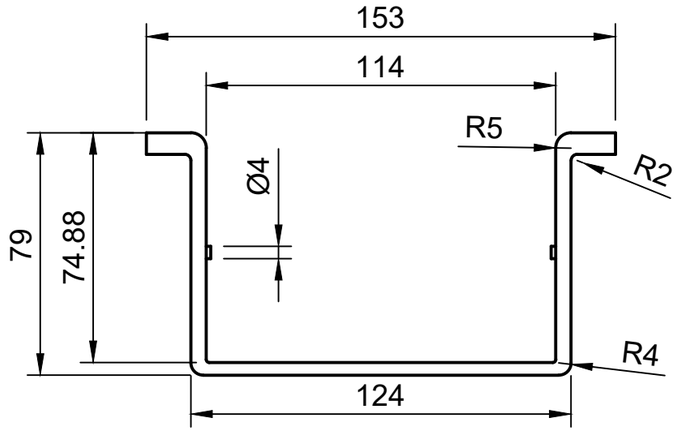

FRONT VIEW ORIN MOUNT (1:2)

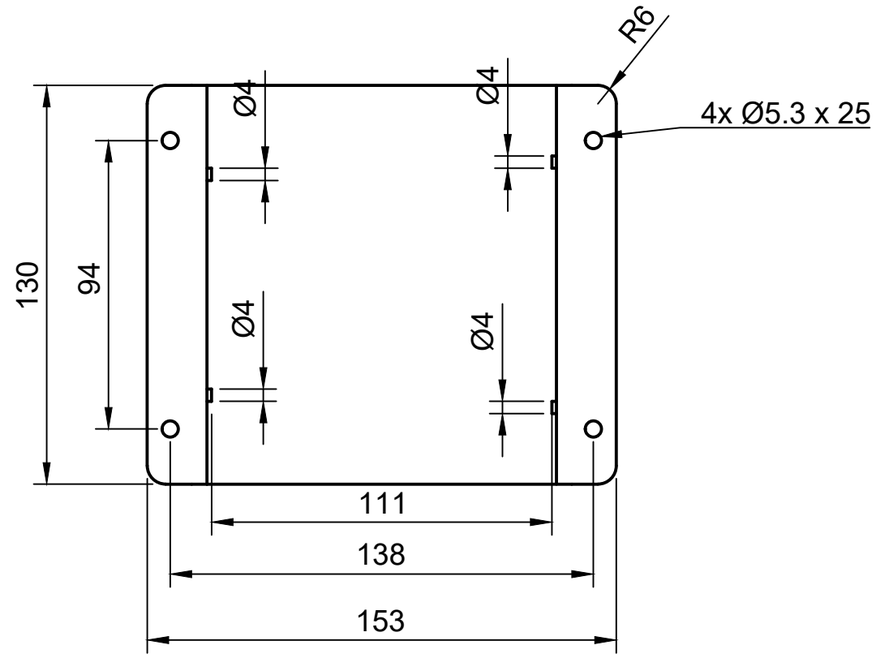

TOP VIEW ORIN MOUNT (1:2)

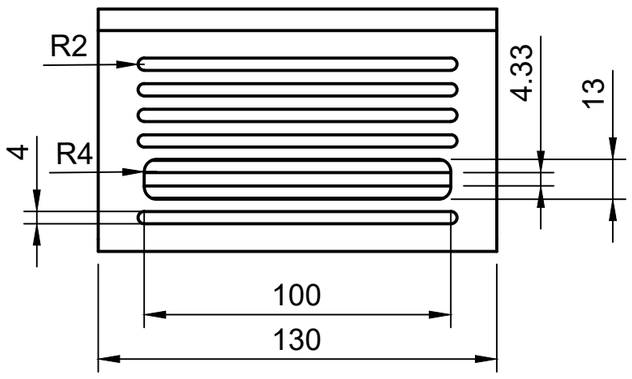

LEFT VIEW ORIN MOUNT (1:2)

Dept. / Technical reference		Created by: Shady Gmira 6/16/2025	Approved by
		Document type	Document status: v2.0
		Title: ASIG-MOMA Engineering Drawings Orin Mount	DWG No.
			Rev. / Date of issue / Sheet: 7/19

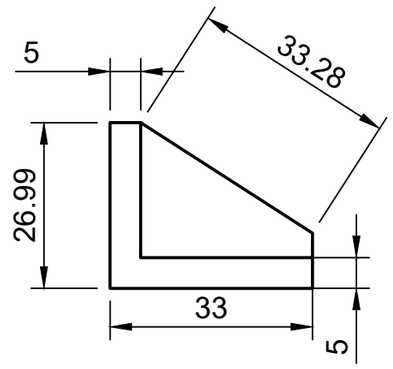

LEFT VIEW CAMERA MOUNT (1:1)

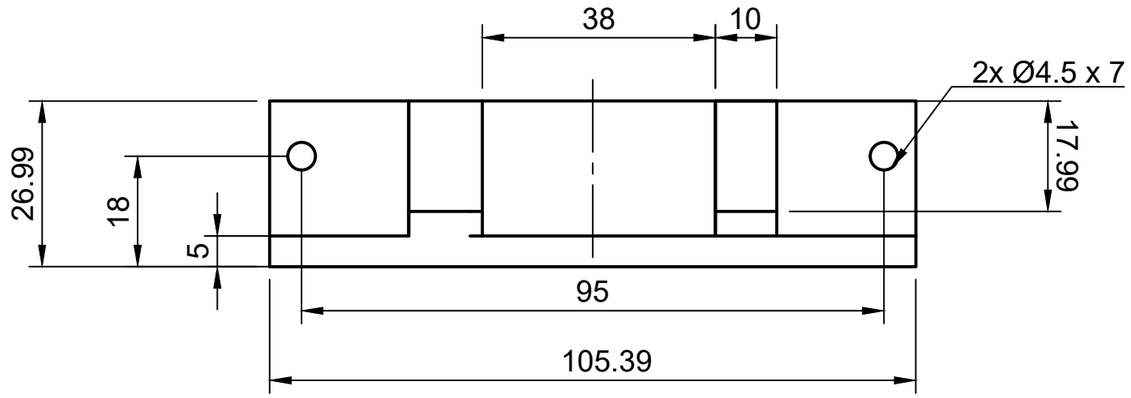

FRONT VIEW CAMERA MOUNT (1:1)

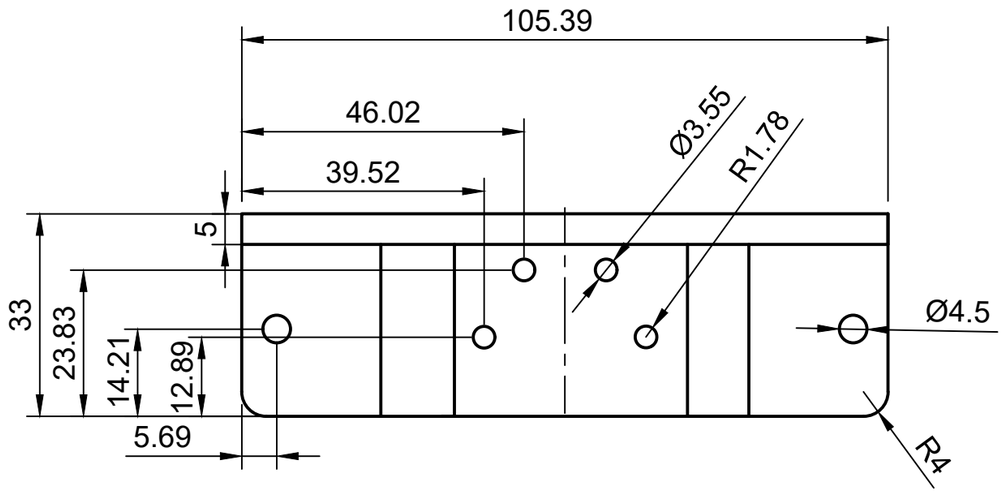

TOP VIEW CAMERA MOUNT (1:1)

Dept.	Technical reference	Created by	Approved by
		Shady Gmira 6/16/2025	
		Document type	Document status: v2.0
		Title: ASIG-MOMA Engineering Drawings Camera Mount	DWG No.
			Rev. / Date of issue / Sheet: 8/19

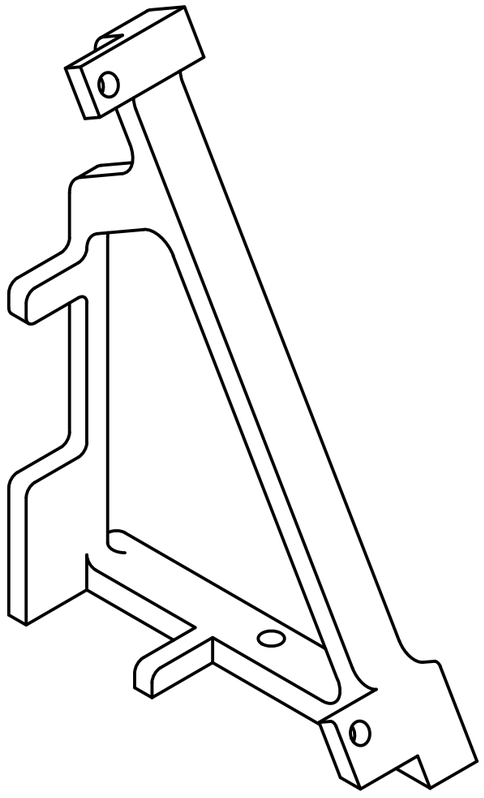

REFERENCE ISOMETRIC
VIEW SCREEN MOUNT
(1:1)

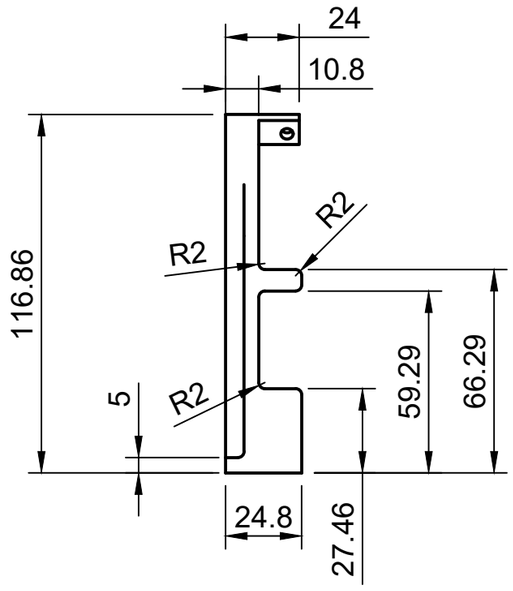

SCREEN MOUNT BACK VIEW (1:2)

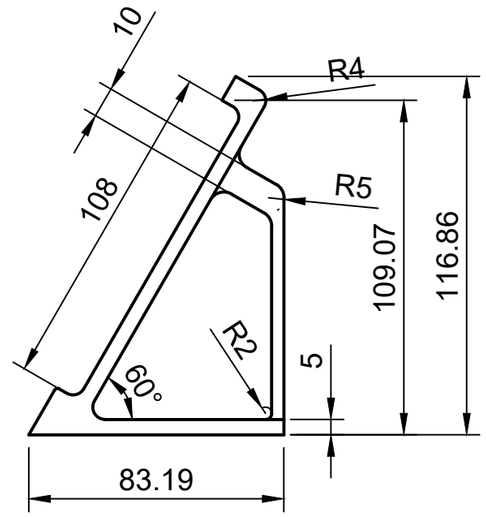

RIGHT VIEW SCREEN MOUNT (1:2)

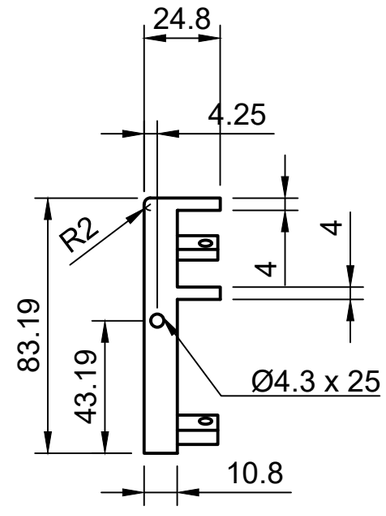

BOTTOM VIEW SCREEN MOUNT (1:2)

Dept.	Technical reference	Created by	Approved by
		Shady Gmira 6/16/2025	
		Document type	Document status: v2.0
		Title: ASIG-MOMA Engineering Drawings Screen Mount	DWG No.
			Rev. / Date of issue / Sheet: 9/19

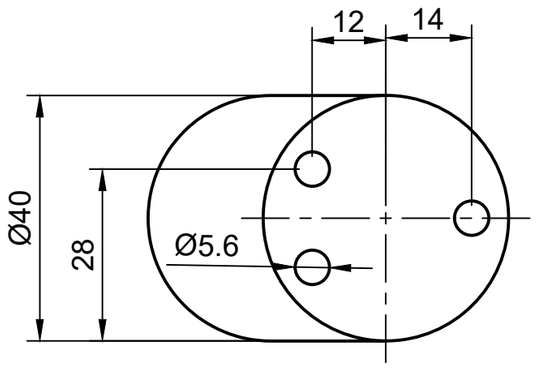

TOP VIEW HANDLE (1:1)

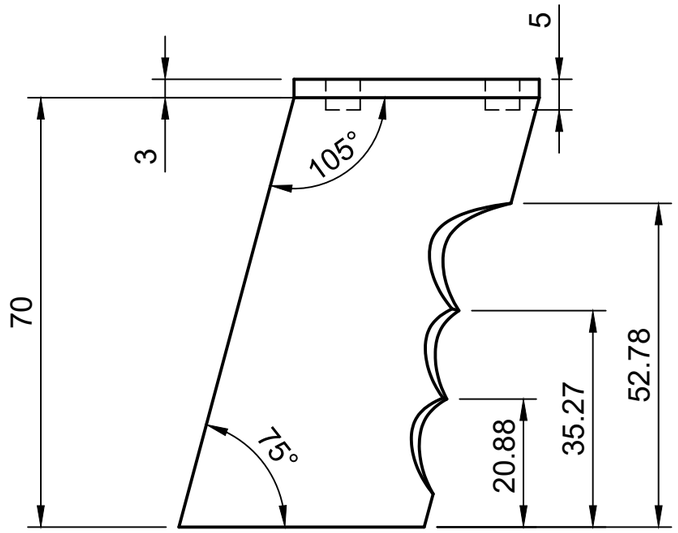

LEFT VIEW HANDLE (1:1)

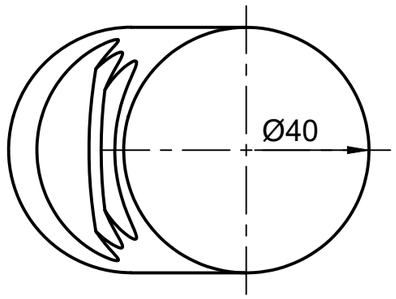

BOTTOM VIEW HANDLE (1:1)

Dept.	Technical reference	Created by Shady Gmira 6/16/2025	Approved by
		Document type	Document status v2.0
		Title ASIG-MOMA Engineering Drawings Handle	DWG No.
			Rev. / Date of issue / Sheet 10/19

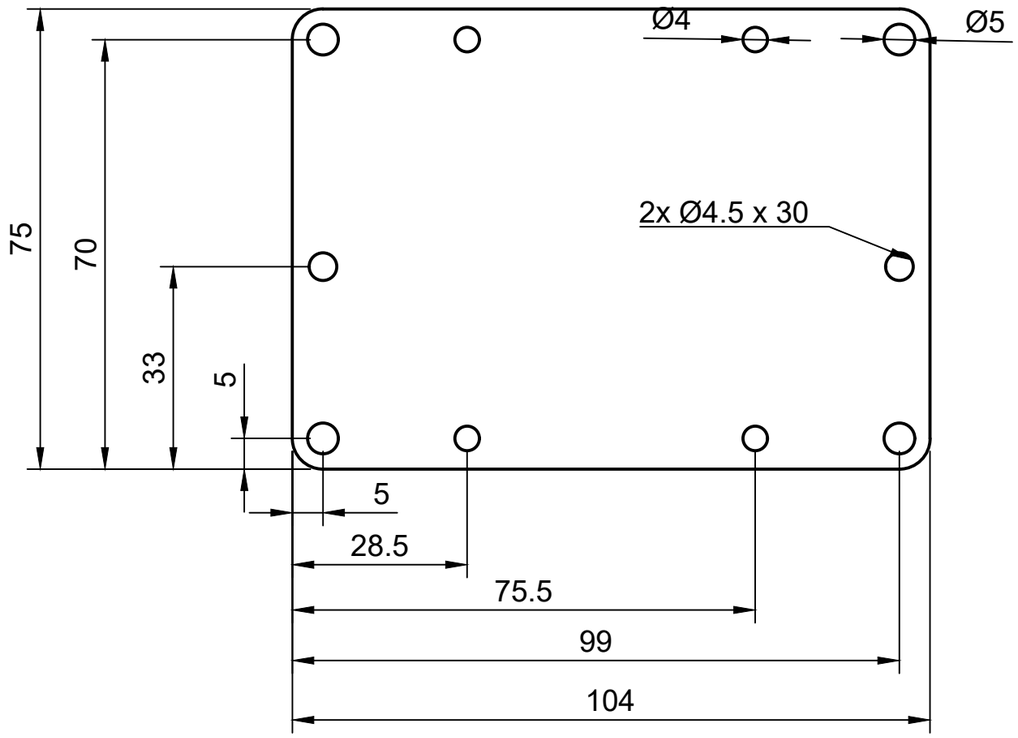

TOP VIEW LIDAR MOUNT (1:1)

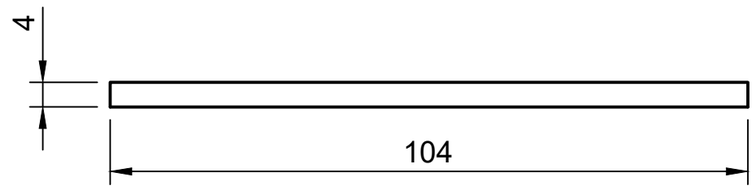

FRONT VIEW LIDAR MOUNT (1:1)

Dept.	Technical reference	Created by: Shady Gmira 6/16/2025	Approved by
		Document type	Document status: v2.0
		Title: ASIG-MOMA Engineering Drawings LiDAR Mount	DWG No.
			Rev. / Date of issue / Sheet: 11/19

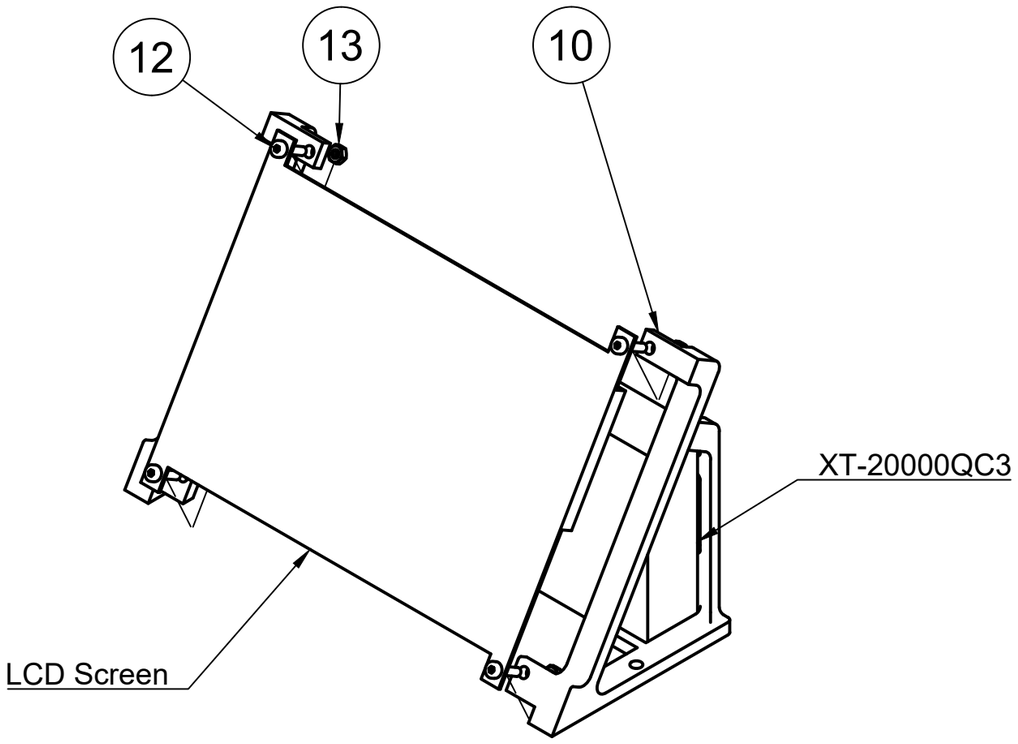

EXPLODED VIEW SCREEN MOUNT (1:2)

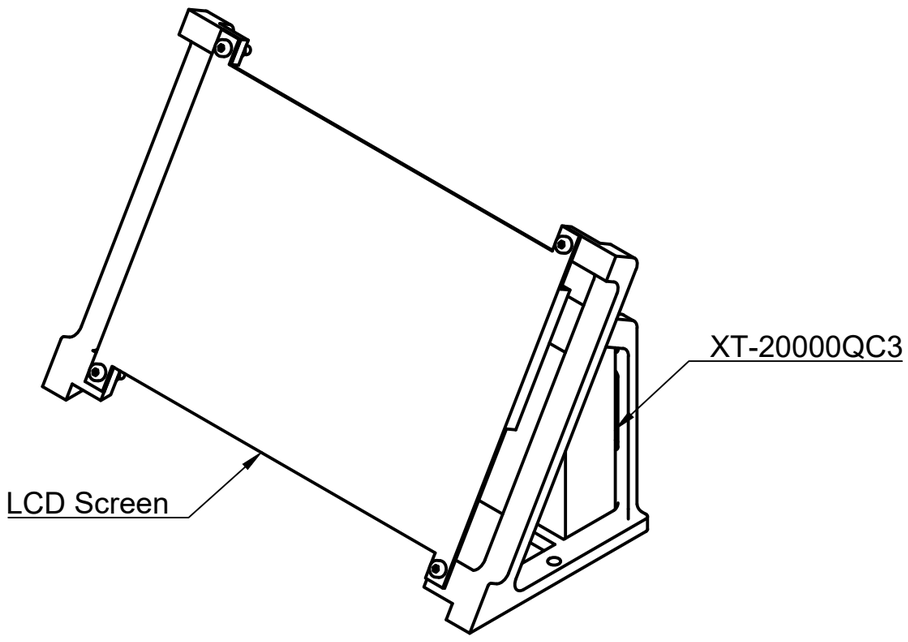

ASSEMBLED VIEW SCREEN MOUNT (1:2)

Dept.	Technical reference	Created by	Approved by
		Shady Gmira 6/16/2025	
		Document type	Document status: v2.0
		Title: ASIG-MOMA Assembly Instructions Screen/Battery to Mount	DWG No.
			Rev. / Date of issue / Sheet: 12/19

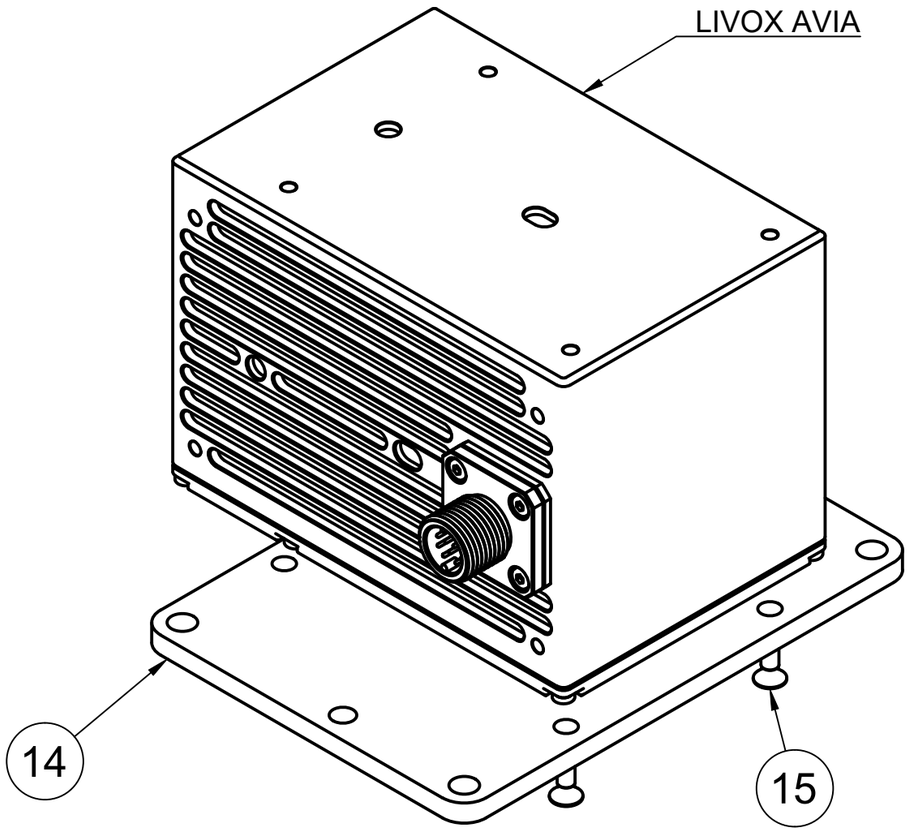

EXPLODED VIEW LIDAR MOUNT (1:1)

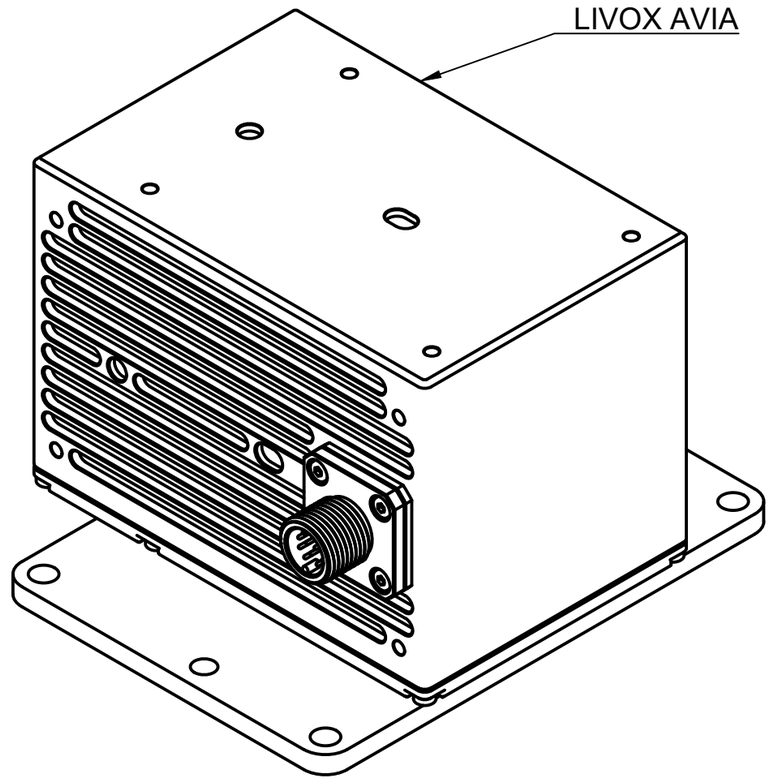

ASSEMBLED VIEW LIDAR MOUNT (1:1)

Dept.	Technical reference	Created by	Approved by
		Shady Gmira 6/16/2025	
		Document type	Document status: v2.0
		Title: ASIG-MOMA Assembly Instructions LiDAR to Mount	DWG No.
			Rev. / Date of issue / Sheet: 13/19

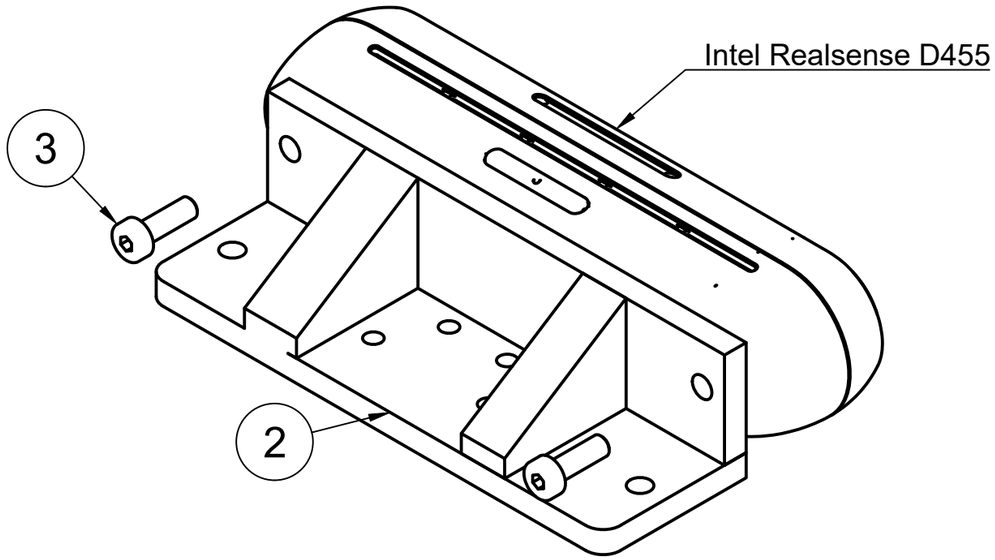

EXPLODED CAMERA MOUNT VIEW (1:1)

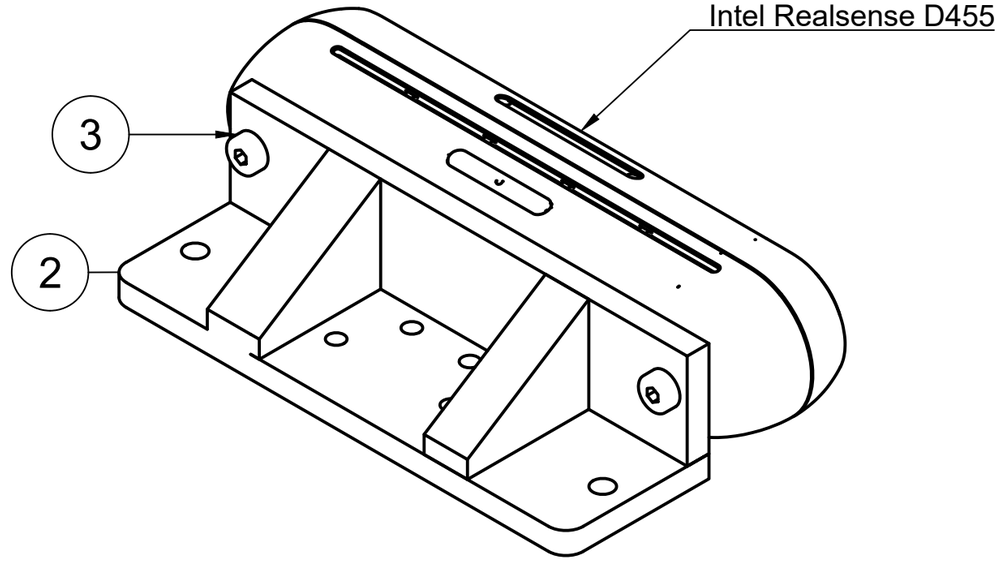

ASSEMBLED CAMERA MOUNT VIEW (1:1)

Dept.	Technical reference	Created by	Approved by
		Shady Gmira 6/16/2025	
		Document type	Document status: v2.0
		Title: ASIG-MOMA Assembly Instructions Camera to Mount	DWG No.
			Rev. / Date of issue / Sheet: 14/19

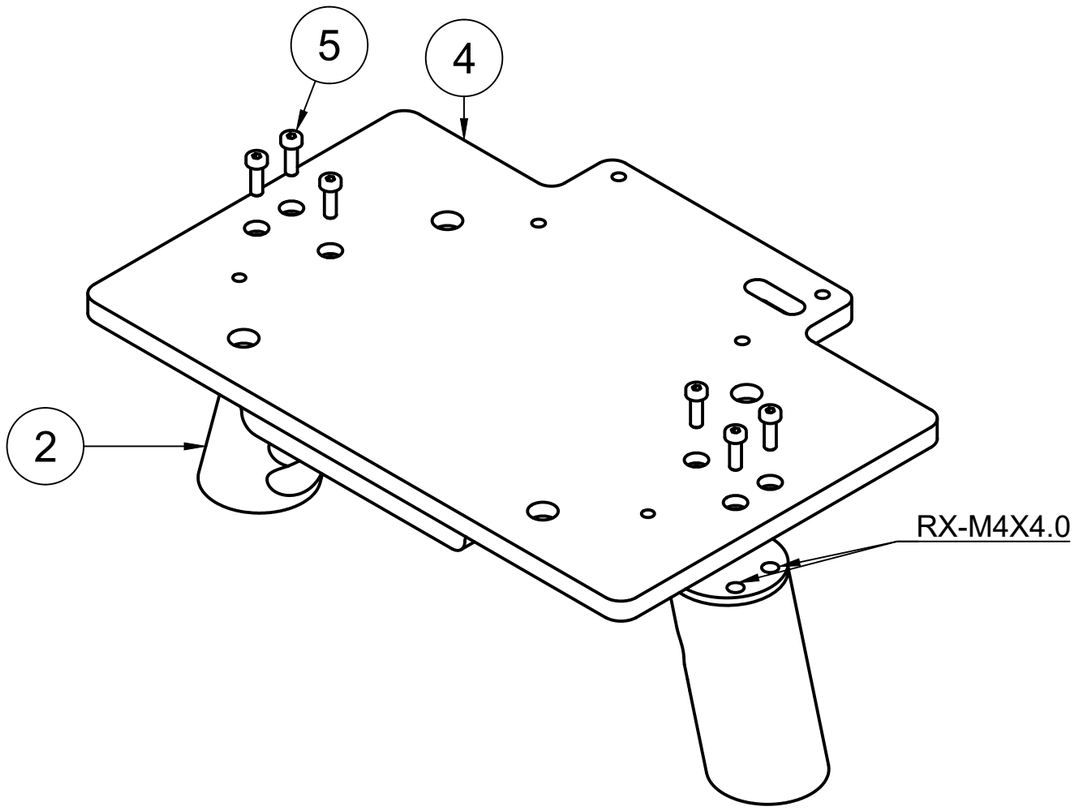

EXPLODED HANDLE VIEW (1:2)

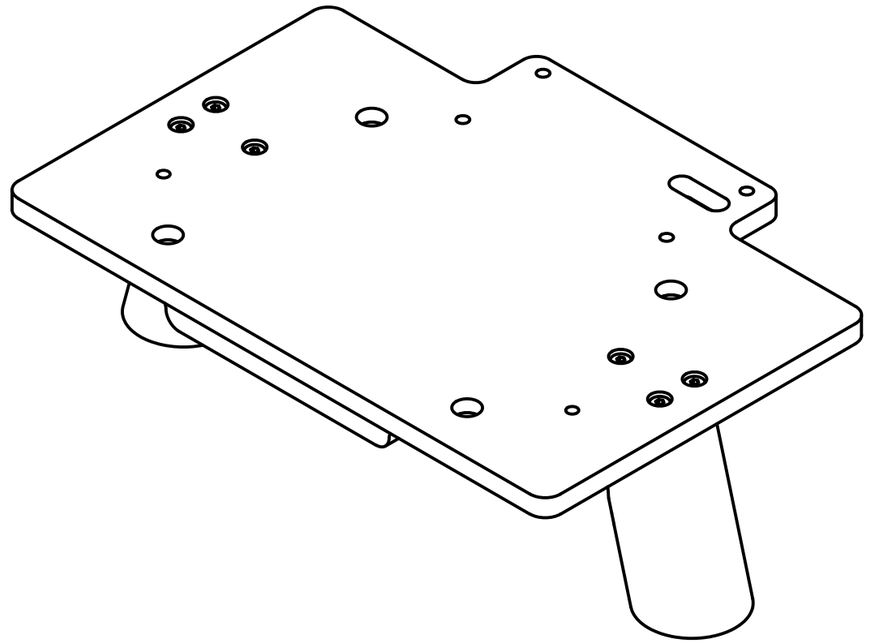

ASSEMBLED HANDLE VIEW (1:2)

Dept.	Technical reference	Created by	Approved by
		Shady Gmira 6/16/2025	
		Document type	Document status
			v2.0
		Title	DWG No.
		ASIG-MOMA Assembly Instructions Handles to Plate	
			Rev. / Date of issue / Sheet: 15/19

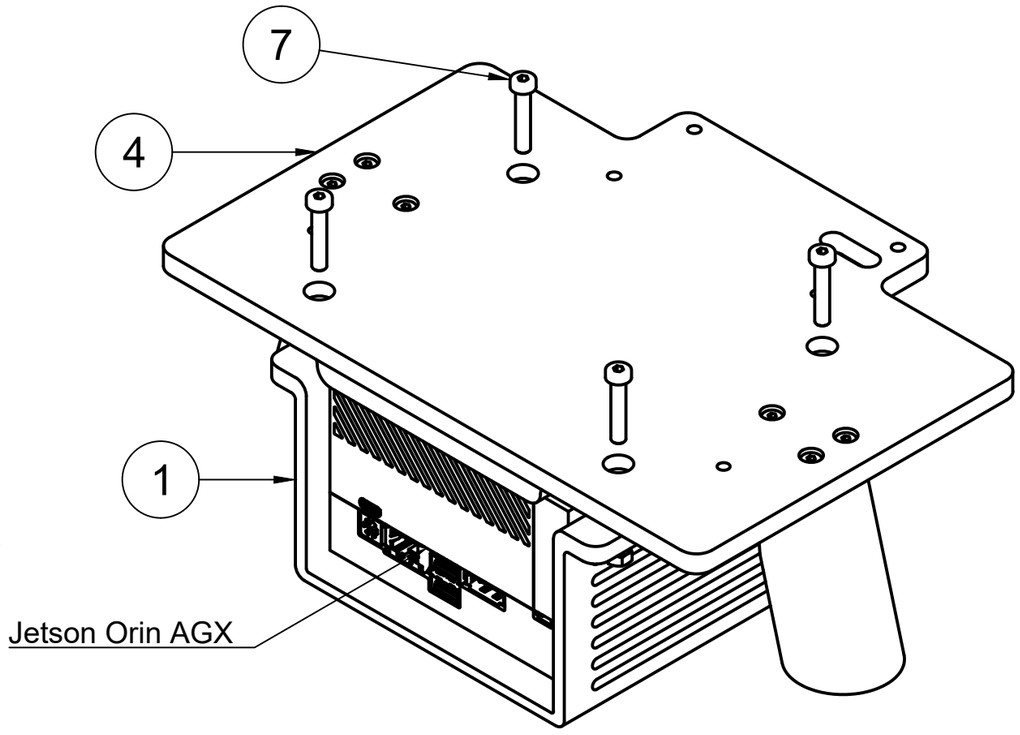

EXPLODED ORIN MOUNT VIEW (1:2)

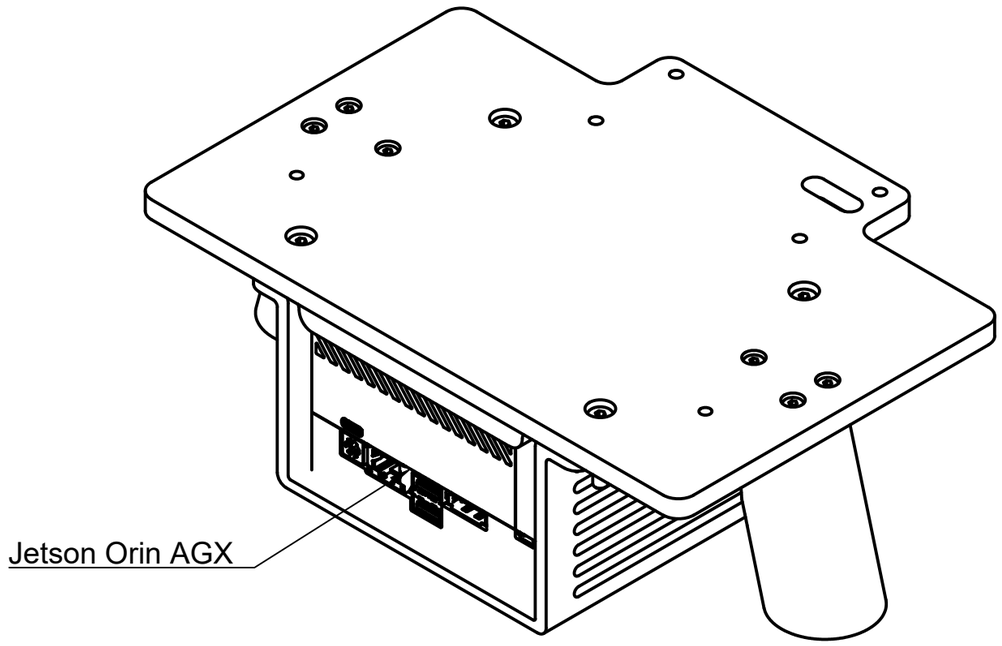

ASSEMBLED ORIN MOUNT VIEW (1:2)

Dept.	Technical reference	Created by	Approved by
		Shady Gmira 6/16/2025	
		Document type	Document status: v2.0
		Title: ASIG-MOMA Assembly Instructions Orin to Plate	DWG No.
			Rev. / Date of issue / Sheet: 16/19

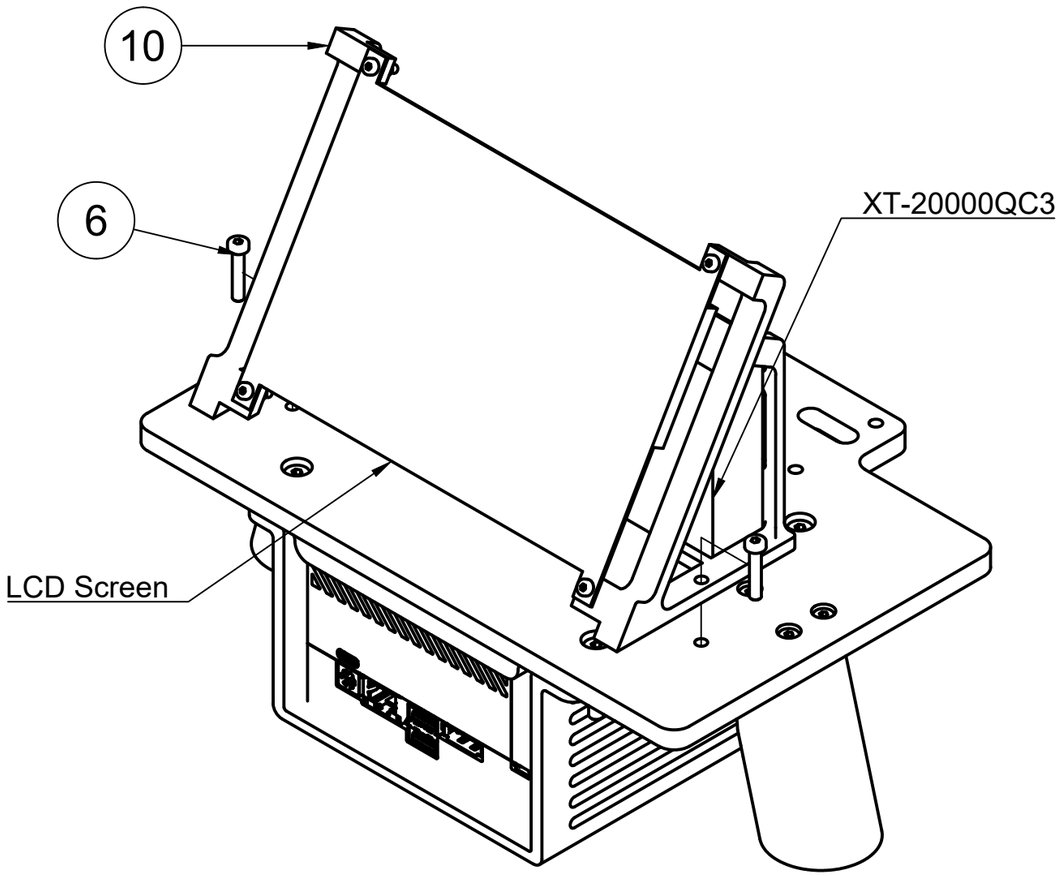

EXPLODED SCREEN MOUNT VIEW (1:2)

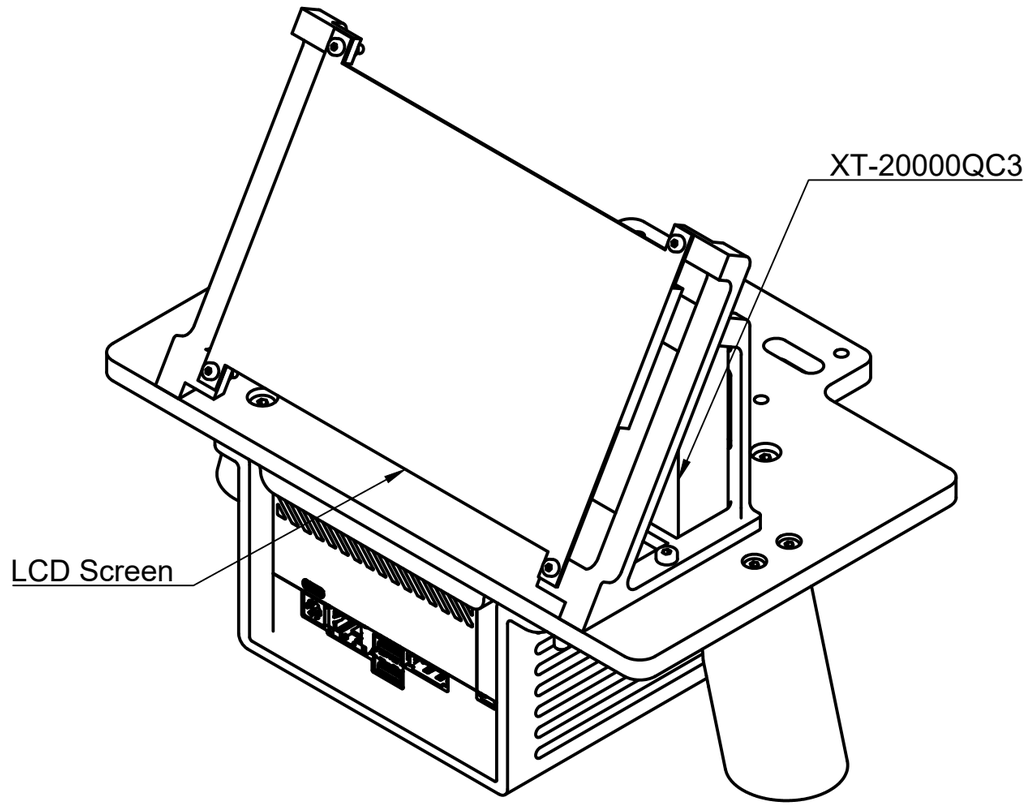

ASSEMBLED SCREEN MOUNT VIEW (1:2)

Dept.	Technical reference	Created by	Approved by
		Shady Gmira 6/16/2025	
		Document type	Document status: v2.0
		Title: ASIG-MOMA Assembly Instructions Screen to Plate	DWG No.
			Rev. / Date of issue / Sheet: 17/19

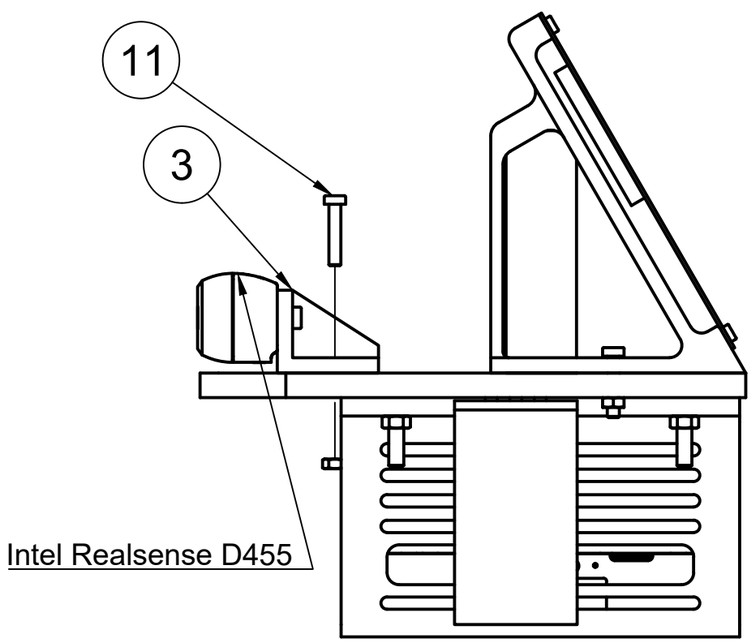

EXPLODED CAMERA MOUNT LEFT VIEW (1:2)

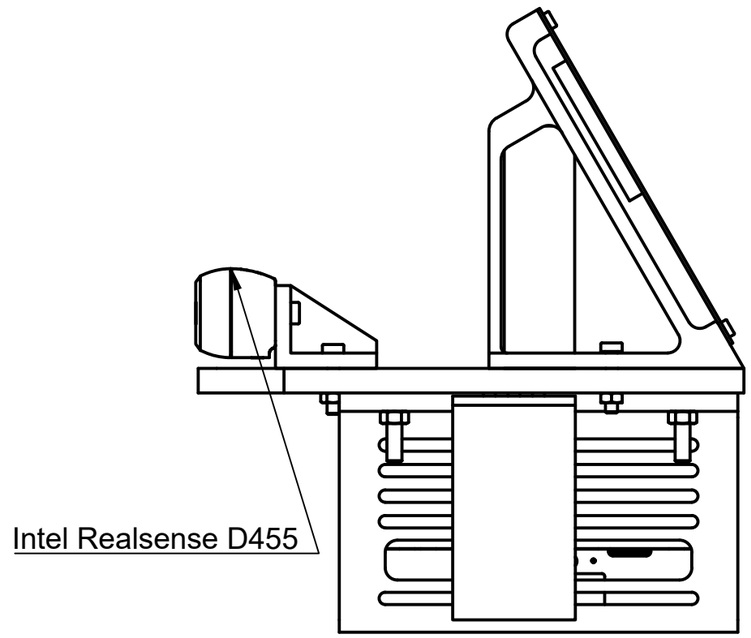

ASSEMBLED CAMERA MOUNT LEFT VIEW (1:2)

Dept.	Technical reference	Created by Shady Gmira 6/16/2025	Approved by
		Document type	Document status v2.0
		Title ASIG-MOMA Assembly Instructions Camera to Plate	DWG No.
			Rev. / Date of issue / Sheet 18/19

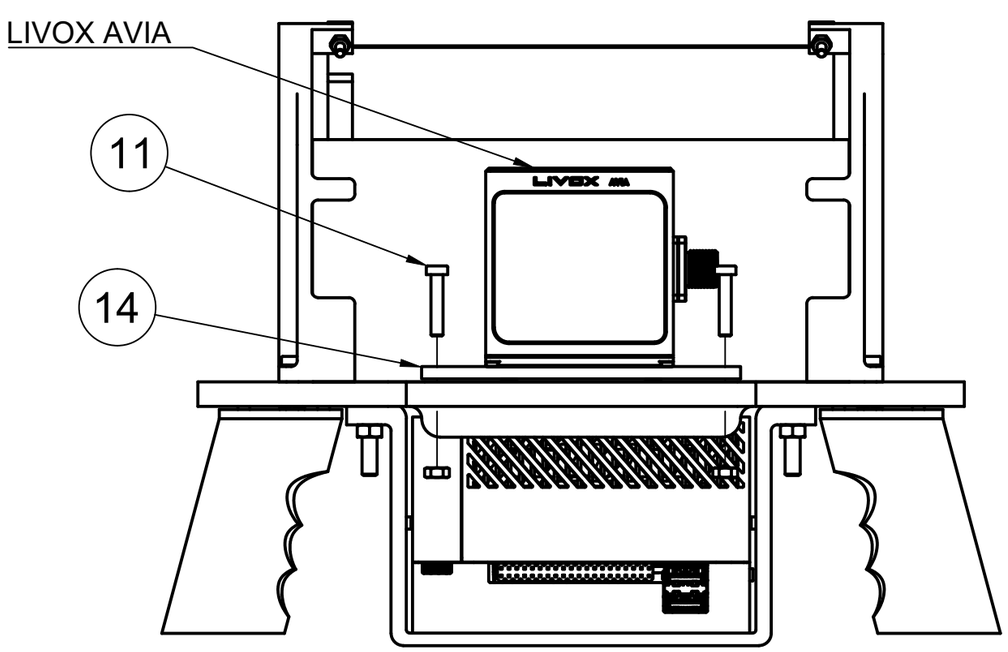

EXPLODED LiDAR MOUNT BACK VIEW (1:2)

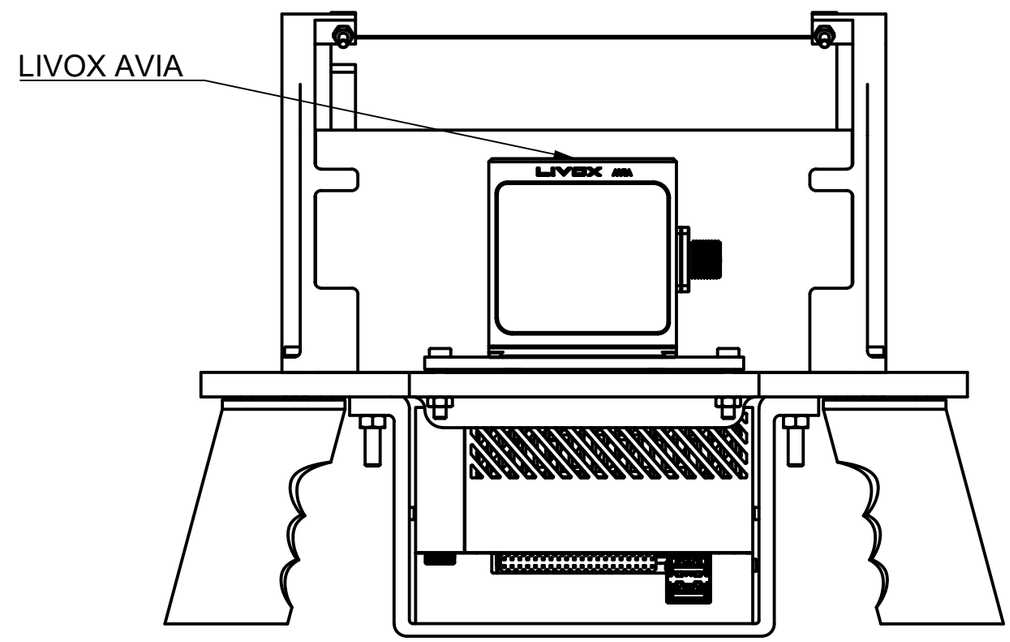

ASSEMBLED LiDAR MOUNT BACK VIEW (1:2)

Dept.	Technical reference	Created by Shady Gmira 6/16/2025	Approved by
		Document type	Document status v2.0
		Title ASIG-MOMA Assembly Instructions LiDAR to Plate	DWG No.
			Rev. / Date of issue / Sheet 19/19